R2

PROFESSIONAL ROTARY DJ MIXER

USER MANUAL

Headliner
LOS ANGELES

TABLE OF CONTENTS

IMPORTANT SAFETY INSTRUCTIONS ---------- 3

FUNCTIONAL DIAGRAM ---------- 4

CONNECTIONS ---------- 6

OPERATION ---------- 7

TECHNICAL SPECIFICATIONS ---------- 9

BLOCK DIAGRAM ---------- 10

WARRANTY ---------- 11

Scan the QR below to get in touch for any questions or if you believe there is an issue with your product, or visit **https://www.headliner-la.com/contact**

Scan the QR below to register your product or visit **https://www.headliner-la.com/my-account**

ADDITIONAL LANGUAGES AVAILABLE ONLINE. SCAN QR CODE ABOVE TO VISIT OUR WEBSITE.

IMPORTANT SAFETY INSTRUCTIONS

1. Read these instructions and all markings on the product. Keep these instructions.
2. Heed all warnings and instructions, both in this manual and on the product.
3. Clean only with a dry cloth. Unplug the unit or its power adapter from AC supply before cleaning.
4. Do not use this product near water and avoid any exposure to water.
5. Before connecting this product to any AC supply (if any), make sure to check whether the AC mains voltage and frequency match the indication on the product and its packaging.
6. Only connect this product or its power adapter to an AC supply (if any) with sufficient power handling, protective earth connection, ground-fault (earth-fault) protection and overload protection.
7. Disconnect the product or its power adapter from the AC supply (if any) during thunderstorms or longer periods of being unused.
8. Make sure any heat sink or other cooling surface, or any air convection slot, is exposed sufficiently to free air circulation and is not blocked.
9. Do not operate this product in environmental temperatures exceeding 35 degrees Celsius and/or 85% relative humidity.
10. Position the product in a safe and stable place for operation, out of reach of unauthorized persons.
11. Make sure any cable connections to and from the product are neither subject to potentially destructive mechanical impact nor present any risk of stumbling or other accident risk to people.
12. Audio equipment may generate sound pressure levels sufficient to cause permanent hearing damage to persons. Always start up at low volume settings and avoid prolonged exposure to sound pressure levels exceeding 90dB.
13. Do not open this product for service purposes. There are no user-serviceable parts inside.
14. Warranty will be void in any case of unauthorized service by the user or other unauthorized persons.
15. Take any precaution required by local law, applicable regulations, or good business.

Correct Disposal of This Product

Applicable in the European Union and other European countries with separate collection systems.

This marking on the product, accessories or literature indicates that the product and its electronic accessories should not be disposed of with other household waste at the end of their working life. To prevent possible harm to the environment or human health from uncontrolled waste disposal, please separate these items from other types of household waste and recycle them responsibly to promote the sustainable reuse of material resources.

FUNCTIONAL DIAGRAM

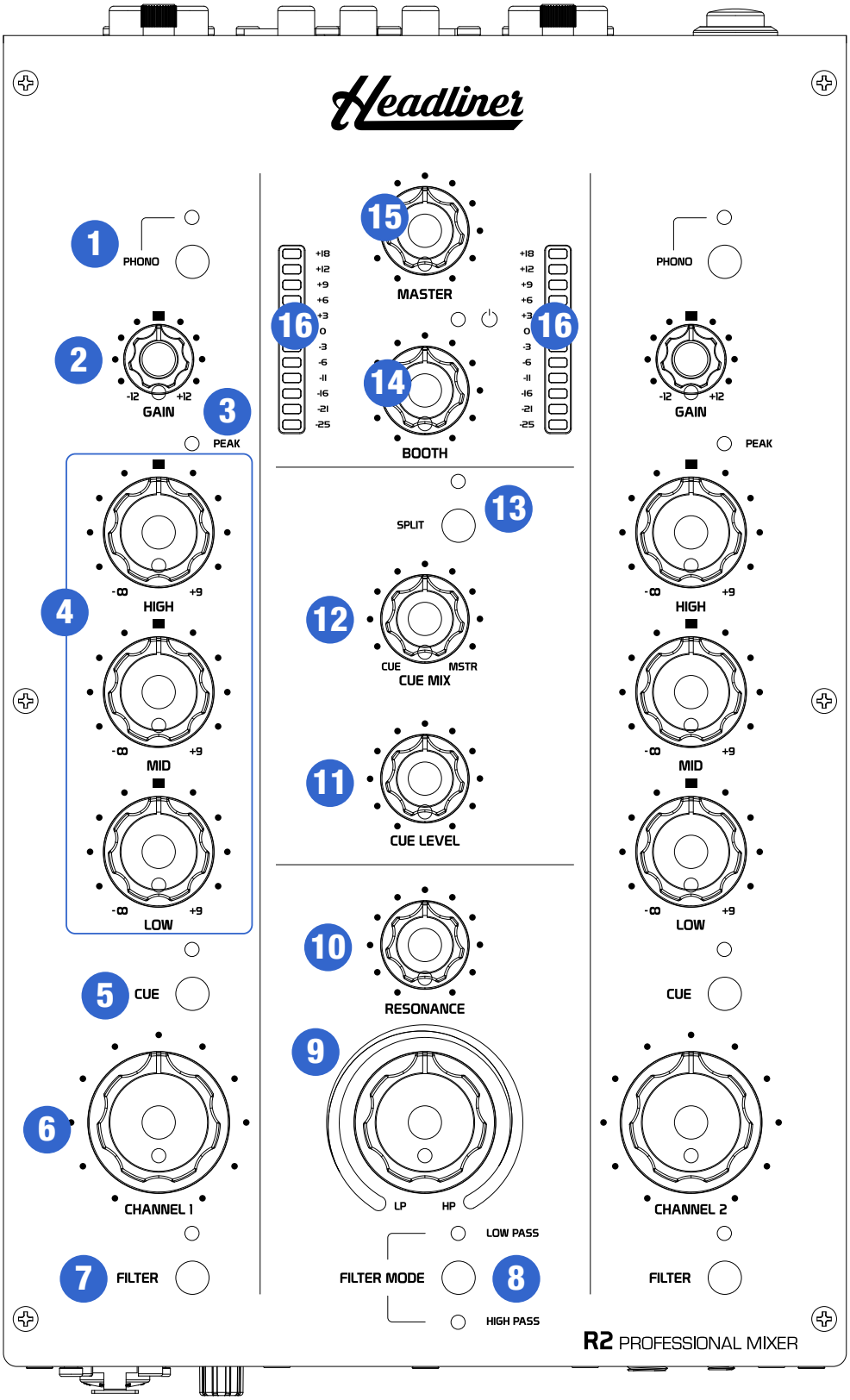

TOP PANEL CONTROLS

1. **Input Selector**
   Switches between phono and line input sources for each channel.

2. **Gain Control**
   Cut and boost input gain by -12dB / +12dB

3. **Peak LED**
   Used to gauge the level of the input signal.

4. **Isolator EQ**
   Boost high, mid, and low frequencies by +9dB or cut them completely.

5. **Cue Assign**
   Turn the cue monitor on or off for each channel.

6. **Volume**
   Adjusts the output volume of each channel.

7. **Filter Assign**
   Assigns each channel to the filter.

8. **Filter Mode**
   Switches between high pass and low pass filter.

9. **Filter Frequency**
   Sweeps the filter frequency from min to max. In high pass mode, turning the knob all the way to the right kills the low frequencies, while in low pass mode, turning the knob all the way to the left kills all the high frequencies.

10. **Filter Resonance**
    Adjusts the filter resonance from mix to max.

11. **Cue Level**
    Adjusts the output level of the headphone monitor.

12. **Cue Mix**
    Blends the headphone monitor signal between cue and master outputs.

13. **Split Cue**
    Isolates the cue and master signals to the left and right outputs of the headphone monitor, respectively.

14. **Booth Volume**
    Adjusts the output level of the booth monitor.

15. **Master Volume**
    Adjusts the output level of the master output.

16. **Output LED Meter**
    Displays the audio signal level of the master output.

FRONT PANEL

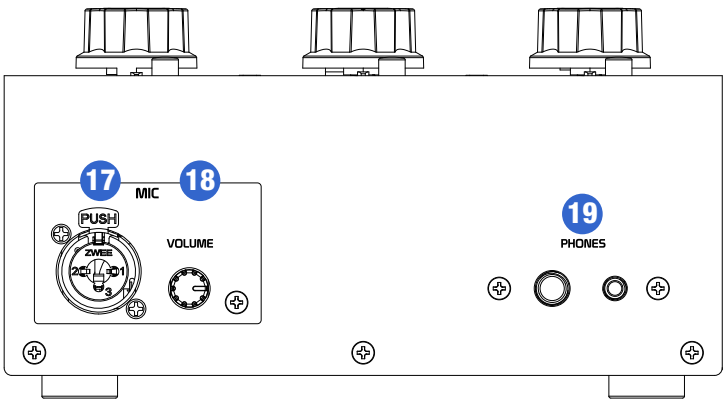

17. **Microphone Input**
    Combo XLR/TRS input connector for dynamic microphones.

18. **Microphone Volume**
    Adjusts the output level of the mic.

19. **Headphone Outputs**
    TRS 1/4” and 1/8” output jacks to connect stereo headphones. The headphone level is controlled by the Cue Level (11) knob.

REAR PANEL CONNECTORS

20. **Channel Inputs**
    Stereo RCA connectors for channels 1 and 2. Connect turntables to the phono inputs, and line sources such as CDJ or media players into the line inputs.

21. **Ground Post**
    Used to connect the ground cable from your turntable. Some turntables do not require a ground cable. Consult your turntable manual.

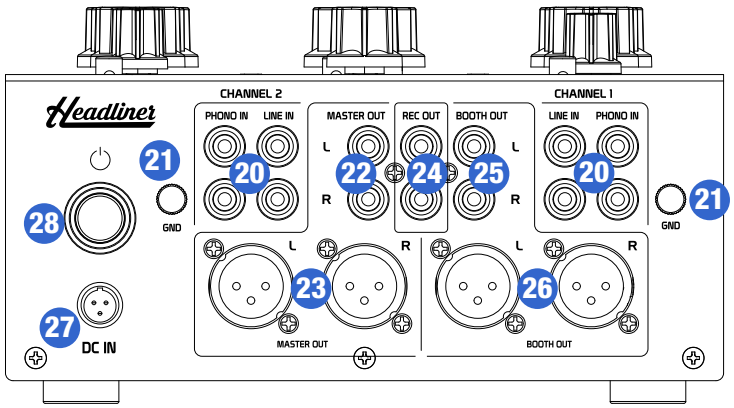

22. Unbalanced Master Output
Stereo RCA connectors to connect to unbalanced inputs such as a home Hi-Fi system.

23. Balanced Master Output
Stereo XLR connectors to connect to balanced inputs such as studio monitors or club sound systems.

24. Record Output
Stereo RCA connectors to connect to audio recording devices.

25. Unbalanced Booth Output
Stereo RCA connectors to connect to unbalanced inputs such as a home Hi-Fi system.

26. Balanced Booth Output
Stereo XLR connectors to connect to balanced inputs such as studio monitors or club sound systems.

27. Power Connector
Locking mini-XLR connector to connect included power supply.

28. Power Button
Push to power the mixer on and off.

CONNECTIONS

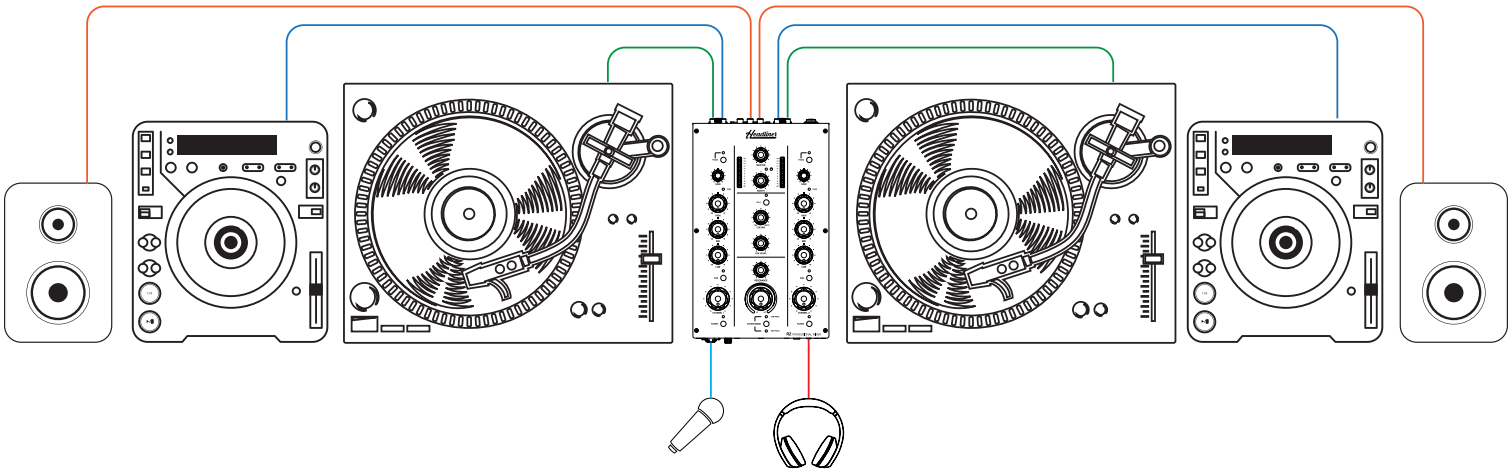

Make sure that your equipment and your speakers are powered off during connections.

1. Using RCA cables, connect the output of your turntables to the **Phono Inputs (20)** of the R2. If your turntable comes with ground cables, connect one end to the ground posts on your turntables, and the other end to the **ground posts (21)** on the R2.

   Connect the left turntable to channel 1 and the right turntable to channel 2. *Skip this step if you are not connecting turntables.*

2. Using RCA cables, connect the outputs of your line level sources, like CDJ's or media players, to the **Line inputs (20)** on the R2. *Skip this step if you are not connecting line level source.*

3. Using RCA or XLR cables, connect the inputs of your speakers to the **Master Outputs (22, 23)** on the R2. If you are also using booth monitor speakers, repeat the process for the **Booth Outputs (25, 26)**.
4. Connect your headphones to the **Phones output (19)** on the front panel. You can use either jack depending on your headphones. It is possible to use both jacks at the same time if 2 people want to listen, but note that the overall volume will decrease slightly.
5. (Optional) To record your set to an external audio recorder, use an RCA cable to connect the **REC Out (24)** on the R2 to the inputs of your recorder.
6. (Optional) Connect a microphone to the front panel **Mic input (17)** using an XLR or TRS cable.
7. You are ready to power on your equipment. Always make sure you turn your speakers last to avoid any pops when powering on the rest of the equipment.

OPERATION

INPUT SELECT

The first step is to select your input source. The **Input Selector** (1) button switches between phono and line input sources for each channel.

Line is selected by default. Push down on the button to select the phono input; The LED will light up. Push it again to return to the line input; The LED will turn off.

If you are using turntables, select the phono input. For all other sources, like CDJ's, select Line.

GAIN

The next step is to adjust the level of incoming input source. The **Gain** (2) knob is used to adjust the input level of the selected source by 12dB of boost or cut.

To boost the level, turn the knob clockwise from the center. To cut the level, turn the knob counter-clockwise from the center.

Use the **Peak LED** (3) to gauge the level of the signal. To achieve proper input level without distortion, the peak LED should occasionally flash during peak transients, but should not be on constantly.

EQ

The **3-band EQ** (4) can boost high, mid, and low frequencies by +9dB or cut them completely.

To boost a frequency, turn its knob clockwise from the center. To cut a frequency, turn its knob counter-clockwise from the center.

The peak LED is located post-EQ and can be used to check peak levels after EQ adjustments.

CUE MONITOR

Before you are ready to mix your first track, you will need to cue up in the headphones. The cue monitor section is used to adjust the mix and level of audio heard in the headphones.

To get started, push the **Cue** (5) button on the channel you want to monitor, and with the **Cue Mix** (12) knob set to cue, slowly turn up the **Cue Level** (11) knob to set your headphone volume.

Once you are ready to mix your second track, you'll need to blend the master output signal with your cue signal so you can hear both together in the headphones. To do that, slowly turn the cue mix knob towards Master until your achieve the right blend.

Turn on the **Cue Split** (13) if you prefer to isolate the cue and master signals in each ear.

VOLUME

Once you have set your gain and EQ levels, and you have your cue monitor working, you are ready to output

your track to the speakers. First turn the master volume all the way down to make sure you don't blow your speakers or give your neighbors a heart attack. Now raise up the channel volume all the way, then slowly turn up the master volume to an acceptable level.

Now that your first track is playing, cue up the second the track and keep going.

FILTER

The filter is located on the master channel and is, effectively, always running in the background, but is not heard unless at least one channel is assigned to it.

To assign a channel, push down the **Filter** (7) button located below each channel volume knob.

The **Filter Mode** (8) button switches between high pass and low pass. High pass is engaged by default. Push the button down to engage the low pass filter.

The **Frequency** (9) knob is used to create filter sweeps. In high pass mode, the knob cuts low frequencies as it is turned clockwise. In low pass mode, the knob cuts the high frequencies as it is turned counter-clockwise.

The **Resonance** (10) knob adjusts the filter resonance from mix to max. Increasing the resonance emphasizes the signal around the cut off frequency, creating a more pronounced sweeping effect. Think of it as going to from a mild effect to a wild effect.

OUTPUTS

The R2 has three outputs: Master, Booth, and REC.

The Master output is the main output, which is meant for your audience. A 12-segment output LED meter (16) is provided to monitor the level of the master output. To ensure a clean sound free of any distortion, the meter should be mostly in the green. It can occasionally peak in the orange, but if you see red, your levels are clipping and your audience is probably not going to like it. If that happens, bring the master volume down until only the green LEDs are lit.

The booth output is a duplicate of the master output. This output is meant for you, the DJ, to listen while in the booth. If you are DJing at home, it is probably not necessary as you will already use the Master output.

The REC out is used to record your set to an external audio recorder. The record output is "pre-master", meaning that the master volume level does not affect the volume of the recording. You can still record a set with the master output all the way down.

TECHNICAL SPECIFICATIONS

LINE INPUTS	Nominal Input Level	-10dBV (-7.8dBu)
	Gain Range	-12dB to +12dB
	Frequency Response	20Hz – 20kHz (+0/- 0.5dB)
	THD + N	< 0.05%
	Input Impedance	10 kOhm
PHONO INPUTS	Nominal Input Level	-40dBu (@1kHz)
	Gain Range	-12dB to +12dB
	THD + N	< 0.05%
	Input Impedance	47 kOhm
	Input capacitance	100pF
	Active RIAA equalization	
	Single stage Phono Preamp	
	Ceramic capacitors	
MICROPHONE INPUTS	Nominal Input Level	-50dBu
	Frequency Response	20Hz – 20kHz (+/- 0.1dB)
	THD + N	< 0.1%
	Input Impedance	1.2 kOhm
MAIN OUTPUTS	Nominal Output Levels, balanced	+4dBu
	Maximum Output Level, balanced	+20dBu
	Nominal Output Levels, unbalanced	-10dBV (-7.8dBu)
	Maximum Output Level, unbalanced	+12dBu
	Frequency Response	20Hz-20kHz (+0/-1.5dB)
	Residual noise	<-86dBu (Line to Master) (A-Weighted)
	Dynamic Range	> 100dB (A-Weighted)
	Crosstalk	< -65dB
	THD + N	< 0.05%
HEADPHONE OUTPUT	Maximum Output Level	70mA/channel into 150Ω
	Minimum Load Impedance	32 Ohms/channel
POWER SUPPLY	Type	External with locking mini-XLR connector
	Input Voltage	100-240v ~ 50/60Hz
	Output Voltage	+/-15V; 500mA

BLOCK DIAGRAM

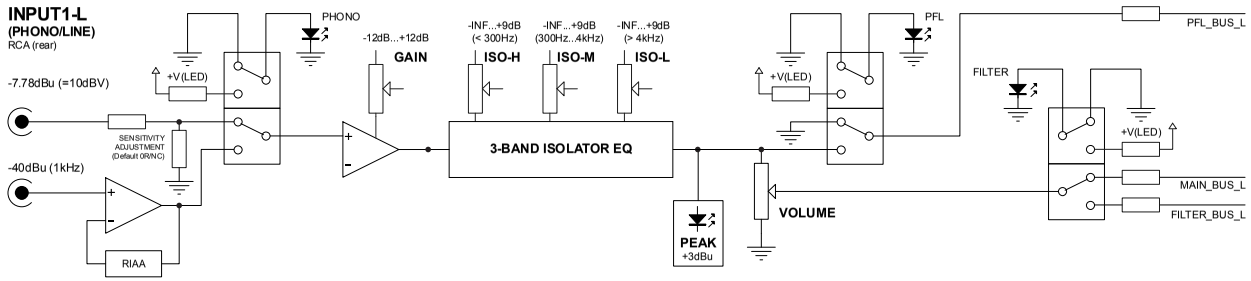

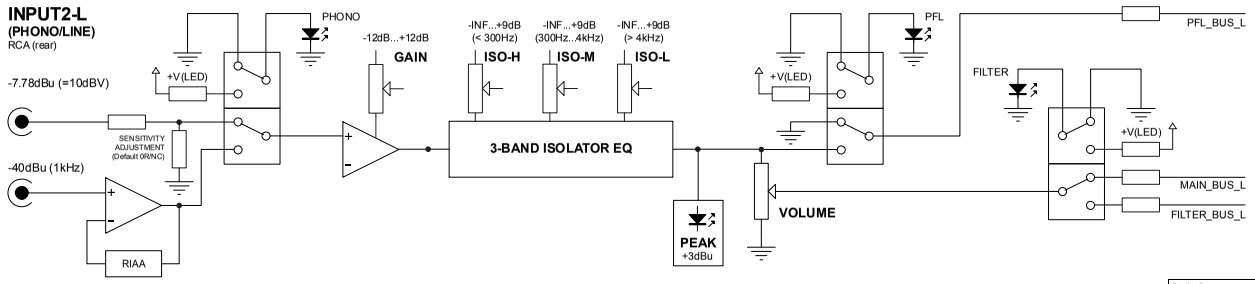

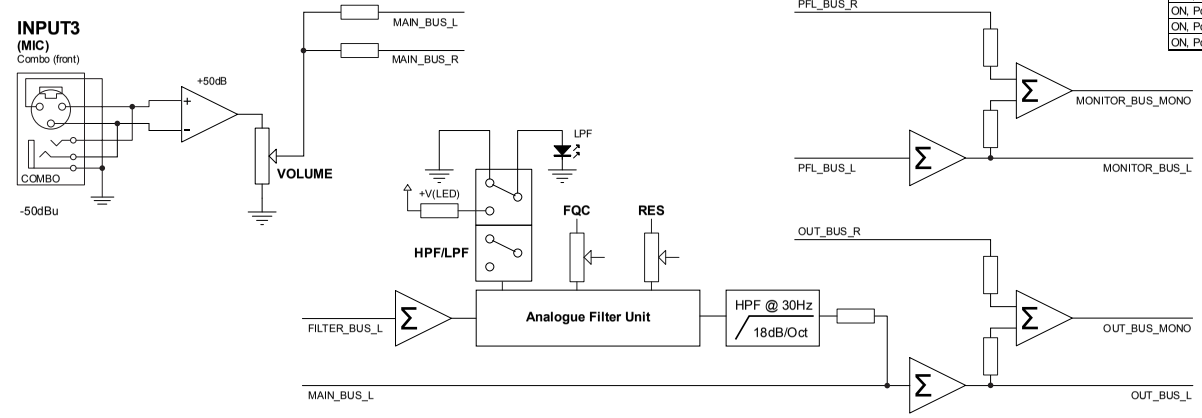

Split Cue	HP-Output-L	HP-Output-R
OFF, Pot FCW	OUT-L	OUT-R
OFF, Pot Centre	Mix OUT/MON-Left	Mix OUT/MON-Right
OFF, Pot FCCW	MON-L	MON-R
ON, Pot FCW	silence	OUT-Mono
ON, Pot Centre	MON-Mono	OUT-Mono
ON, Pot FCCW	MON-Mono	silence

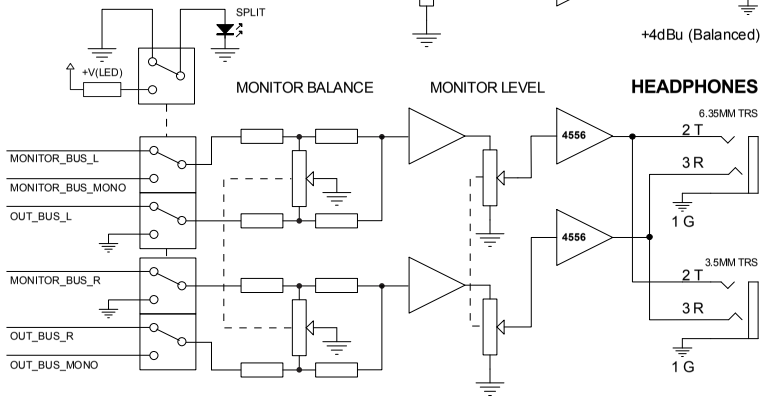

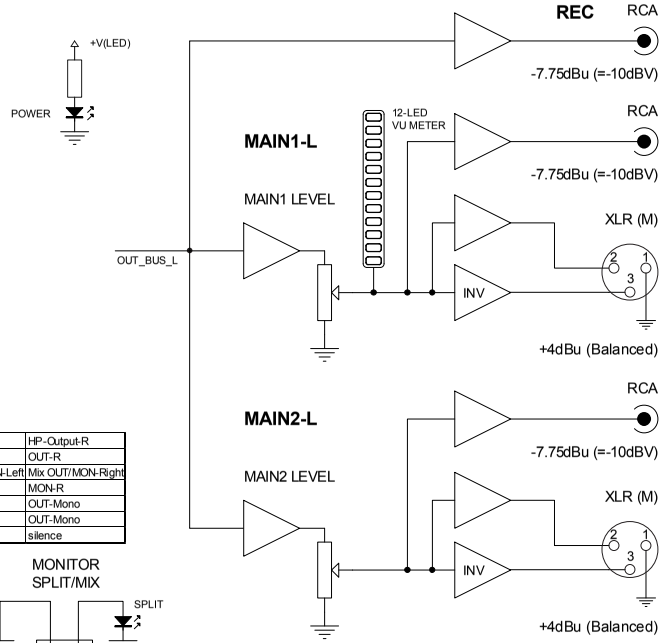

TO BE NOTED

1. This Block Diagram shows only one stereo channel. The other channel is considered identical.
2. This Block Diagram does not consider phase relations. These need to be checked separately.
3. This block diagram does not show the output mute curcuits which however are required.
4. This block diagram does not consider impdeance issues and may show more or less buffers than required.

WARRANTY

Headliner guarantees that the Mixer will be free from defects in its construction and materials for a period of two years from the day of purchase. If the product doesn't work as it should, Headliner or their authorized representatives will either fix it or provide a replacement, but there are some conditions to keep in mind:

- The warranty won't cover any issues caused by improper installation, operation, accidents, damage, misuse, abuse, or modifications to the mixer.
- Normal wear and tear or any other event beyond Headliner's control won't be covered by the warranty.
- The warranty only applies to the original purchaser and can't be transferred to someone else.
- Headliner or their authorized representatives will decide whether to repair the defective product or provide a replacement of equal value, based on their own judgment.
- This warranty is the only remedy available to the purchaser. Headliner won't be responsible for any other repair or replacement costs, or any damage or loss that directly or indirectly results from the malfunction of this mixer.

Scan the QR below to get in touch for any questions or if you
believe there is an issue with your product, or visit
https://www.headliner-la.com/contact

All features and specifications contained in this document are subject to change without notice to improve reliability, function, design or otherwise.

a mixware brand

© 2023 Mixware, LLC. Headliner and the Headliner Los Angeles logo are trademarks of Mixware, LLC in the USA and other countries. All rights reserved. The names of companies and products mentioned herein are trademarks or registered trademarks of their respective owners.

www.mixware.net